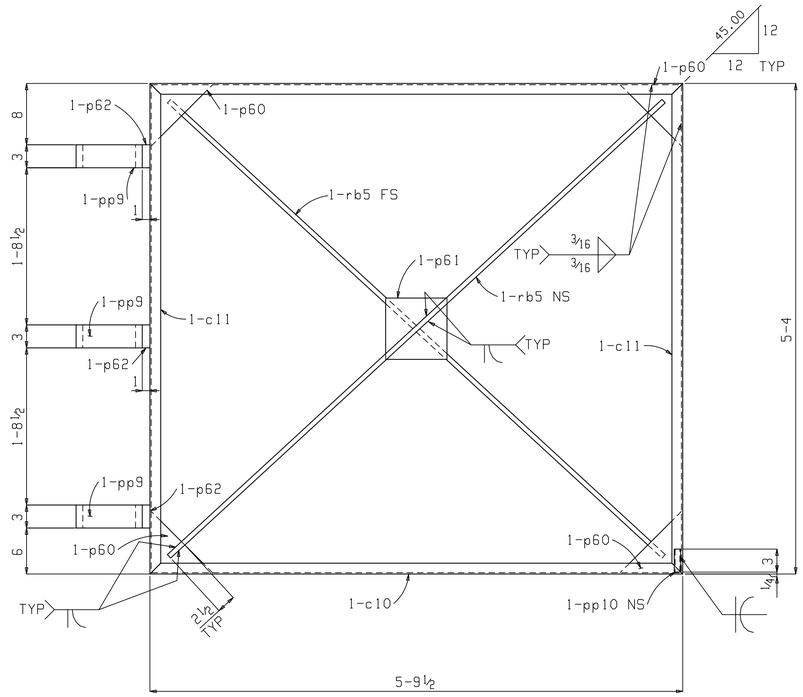

ONE TRASH ENCLOSURE GATE 238G1

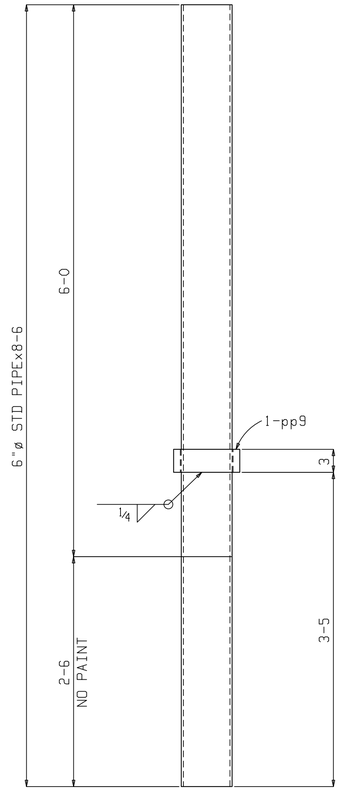

2 GATE POSTS 238M1

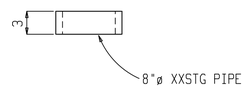

4 HINGE STOPS 238M2

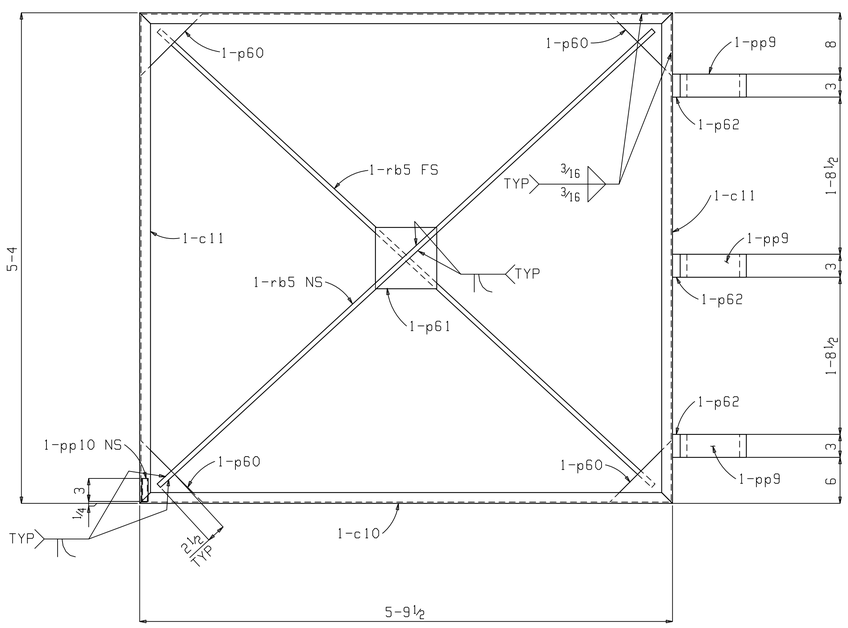

ONE TRASH ENCLOSURE GATE 238G2

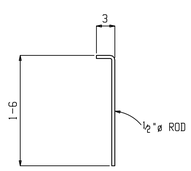

2 CANE BOLTS 238R1

BILL OF MATERIAL

SEQ	QTY	ERECT. MK	NO.	SHAPE	LENGTH		ASSY MK	REMARKS	GRADE	ITEM	Weight
											Unit
2	1	238G1	ONE	TRASH ENCLOSURE							179
				GATE							
			1	C3x4.1	5	9½	238G1		A36		23
			3	PIPE 8 XXS	0	3	pp9		A53		18
			1	PIPE ½ STD	0	3	pp10		A53		0
			1	C3x4.1	5	9½	c10	B2E	A36		23
			2	C3x4.1	5	4	c11	B2E	A36		22
			2	RB⅝	7	3 11/16	rb5		A36		8
			3	PL1x2	0	3	p62		A36		2
			4	PL¼x8	0	8	p60		A36		2
			1	PL¼x8	0	8	p61		A36		5
2	1	238G2	ONE	TRASH ENCLOSURE							179
				GATE							
			1	C3x4.1	5	9½	238G2		A36		23
			3	PIPE 8 XXS	0	3	pp9		A53		18
			1	PIPE ½ STD	0	3	pp10		A53		0
			1	C3x4.1	5	9½	c10	B2E	A36		23
			2	C3x4.1	5	4	c11	B2E	A36		22
			2	RB⅝	7	3 11/16	rb5		A36		8
			3	PL1x2	0	3	p62		A36		2
			4	PL¼x8	0	8	p60		A36		2
			1	PL¼x8	0	8	p61		A36		5
2	2	238M1	2	GATE POST							180
			2	PIPE 6 STD	8	6	238M1		A53		162
			2	PIPE 8 XXS	0	3	pp9		A53		18
2	4	238M2	4	HINGE STOP							18
			4	PIPE 8 XXS	0	3	238M2		A53		18
2	2	238R1	2	CANE BOLT							
		238R1	2	RB½	1	8¼	238R1	BENT			

Total weight : 789

REV	DATE	DESCRIPTION
0	May 6 2019	RELEASE FOR FABRICATION
A	Feb 18 2019	ISSUE FOR APPROVAL

REFERENCE DRWG./LOCATION: E202

MATERIAL (UNLESS NOTED): A36

SURFACE PREPARATION: SP3

SHOP PAINT: 1 S/C SHOP PRIMER

SHOP CONNECTIONS/ELECTRODES: E70XX L.H.

FIELD CONNECTIONS: ¾ ø A325

HOLES (U.N.): 13/16 ø

MS
2427 DALLAS AVE.
APACHE JUNCTION, AZ 85120
PH: 480-671-5730
FX: 480-983-6802

JOB: 50C BUILDING 2

LOCATION: PHOENIX, AZ

DRWG. COVERS: TRASH ENCLOSURE GATE DETAILS

DETAILER: PALMETTO STRUCTURAL DETAILING, LLC

CHECKER: McMAHAN DATE: 2-18-19

PROJECT MANAGER: DENISE GUENTHER

JOB #: 19-113

DRWG. #: F238

PLOT DATE/TIME: 03 May 2019 16:50:07