BILL OF MATERIAL

SEQ	QTY	ERECT. MK	NO.	SHAPE	LENGTH		ASSY MK	REMARKS	GRADE	ITEM	HOLE	Weight
												Unit
100	1	1016C1	ONE	COLUMN						3-6		1767
			1	HSS10x0.500	32	1	1016C1	S2E	A53		N	1626
			1	PL¾x20	1	8	BP2		A36		Y	84
			1	BPL⅜x12	1	5½	bp24	BENT	A36		Y	21
			1	PL⅜x12	1	2½	p146		A36		Y	18
			1	PL⅜x8⅞	0	9	p149		A36		Y	8
			1	PL⅜x4½	0	6	p128		A36		Y	3
			1	PL⅜x3¾	0	6	p142		A36		Y	2
			1	RPL¼x3¾			CP1		A36		N	5

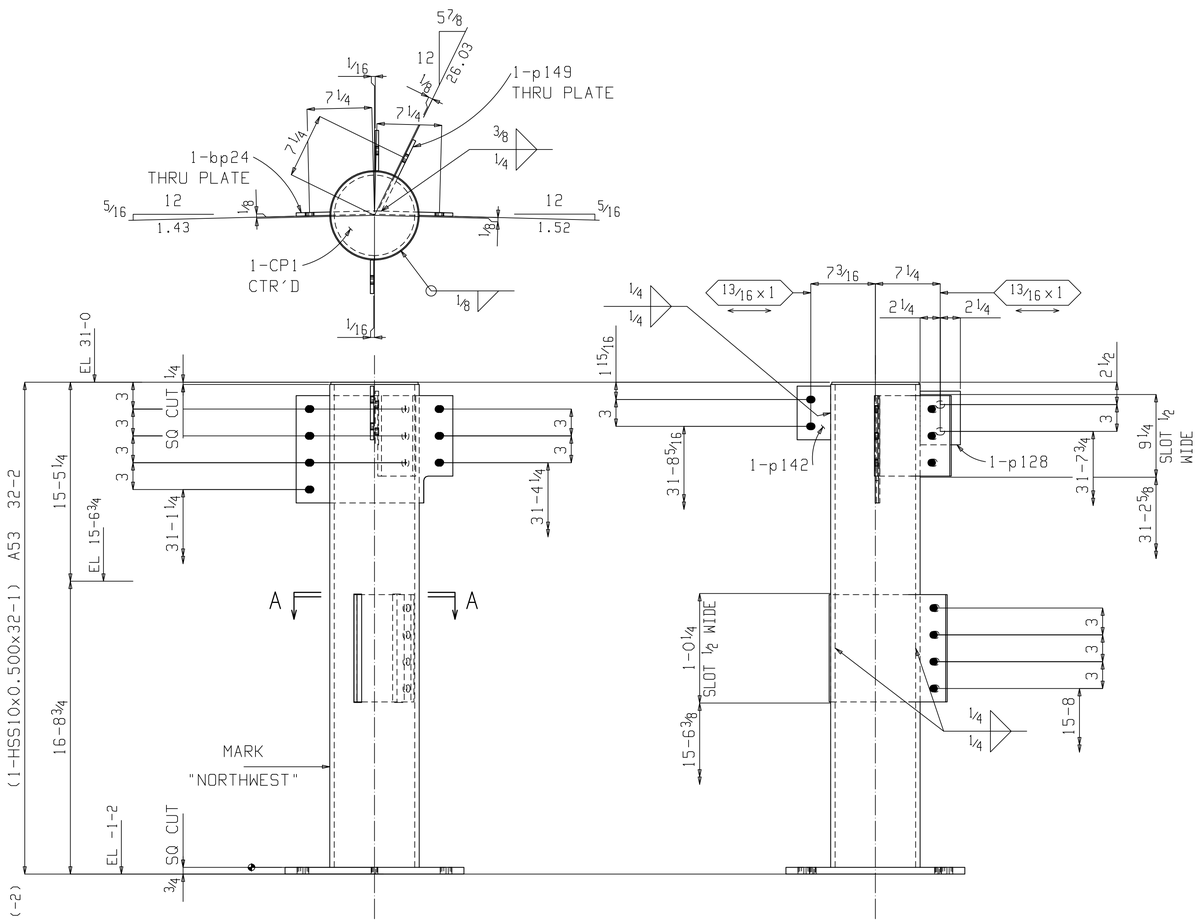

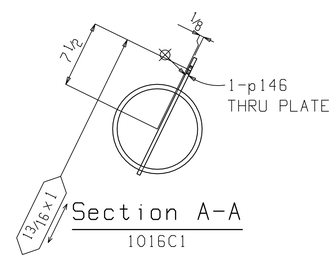

Section A-A
1016C1

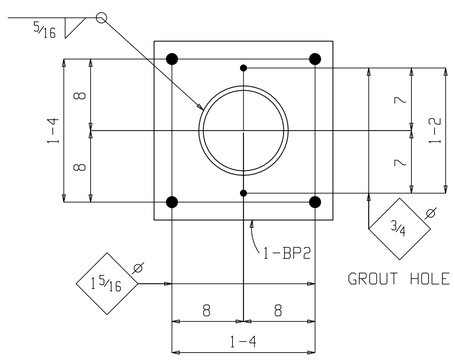

ONE COLUMN 1016C1

AT GRID:
M3 & MC0.7

Total weight : 1767

REV	DATE	DESCRIPTION
0	Apr 5 2019	RELEASE FOR FABRICATION
A	Mar 8 2019	ISSUE FOR APPROVAL

RELEASE AND REVISION RECORD

REFERENCE DRWG. / LOCATION: E101 & E103

MATERIAL (UNLESS NOTED): ASTM A36

SURFACE PREPARATION: SP2

SHOP PAINT: 1 S/C SHERWIN WILLIAMS KEM KROMIC B50WZ1

SHOP CONNECTIONS/ELECTRODES: WELD / E70XX

FIELD CONNECTIONS: ¾ A325

HOLES (U.N.): 13/16

SC STEEL
114 EAST WAREHOUSE COURT - TAYLORS, SC 29687
PHONE: 864 244-2860 - FAX: 864 244-0839

PROJECT: CHEROKEE HOSPITAL ADDITION
CUSTOMER: ROBINS & MORTON GROUP
LOCATION: CHEROKEE, NC
ARCH/ENG: MCMILLAN PAZDAN SMITH / SKA CONSULTING ENGINEERS
DETAIL OF: COLUMN DETAILS (SEQ. 100)

DETAILER: PALMETTO STRUCTURAL DETAILING
CHECKER: McMAHAN DATE: 3-6-19
PM: E. FERRILL

JOB NO.: 31-19003
DRAWING NO.: F1016

jason Apr 30 2020 02:07:34 PM